ZHEJIANG SUNMIXER SANITARY WARE CO.,LTD.
Science&technology Industrial Zone,Chumen,Yuhuan, Zhejiang, China 317605
Tel: +86-576-87121119 Fax: +86-576-87121319 Http://www.pre-rinse.com
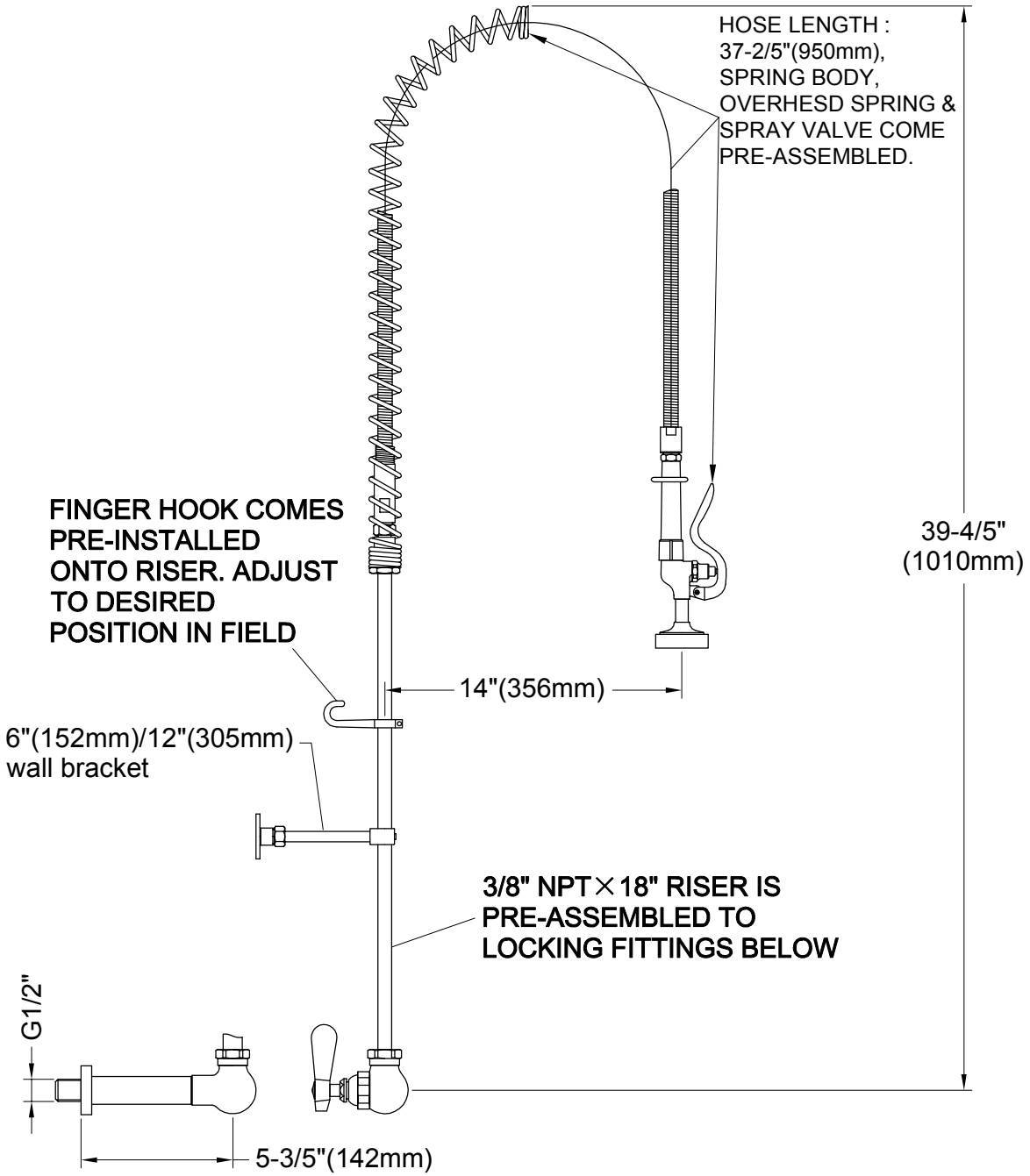
Model No.
98011-1
Item No.
-